Installation instruction

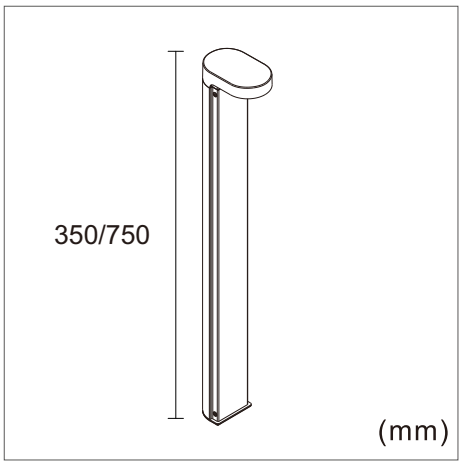

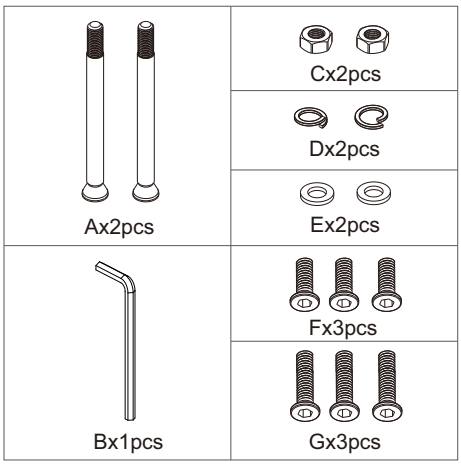

Accessories bag

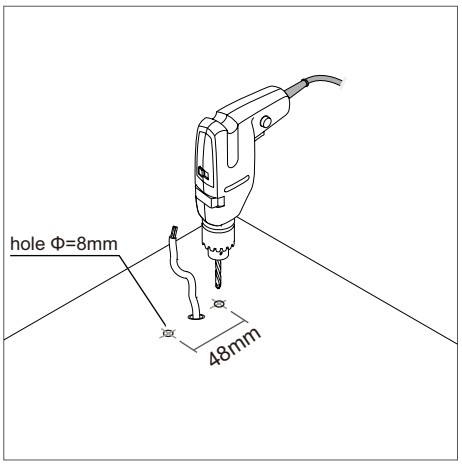

1.Drill two 8mm diameter anchor holes into the ground, each 60mm deep and spaced 48mm apart.

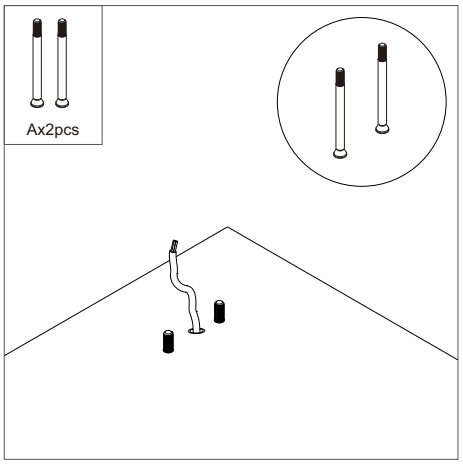

2. Insert the expansion screw to the holes

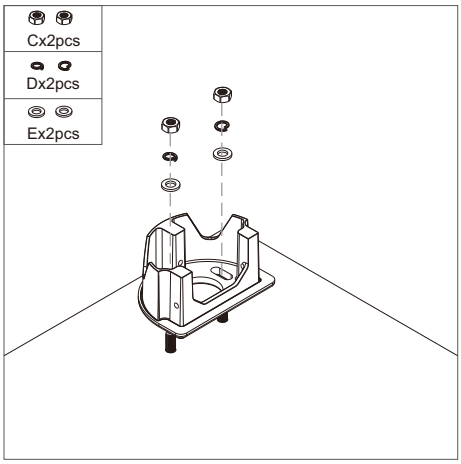

3. Fix the mounting plate

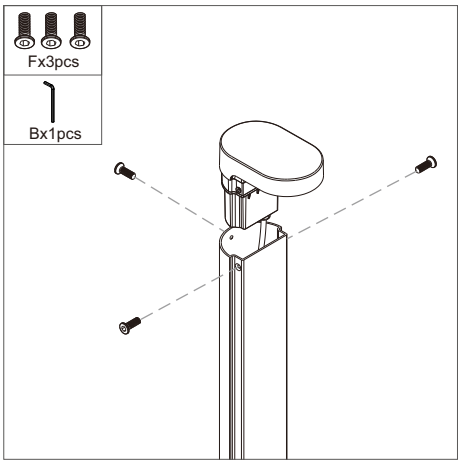

4. Fix the bollard head and bollard tube

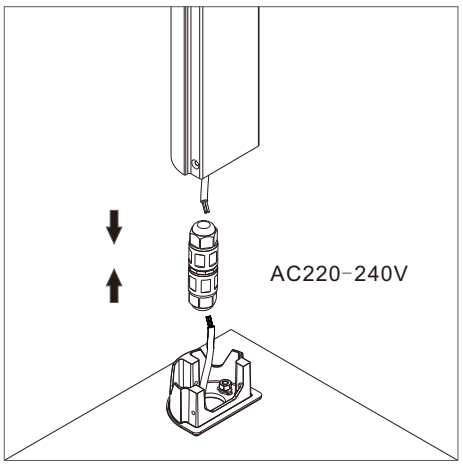

5. Connect the bollard wire to the electricity cable

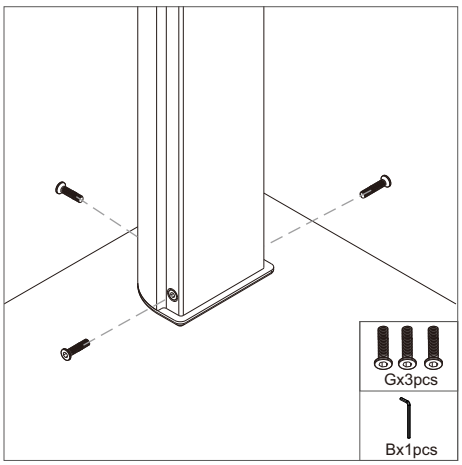

6. Fix the bollard tube onto the mounting base

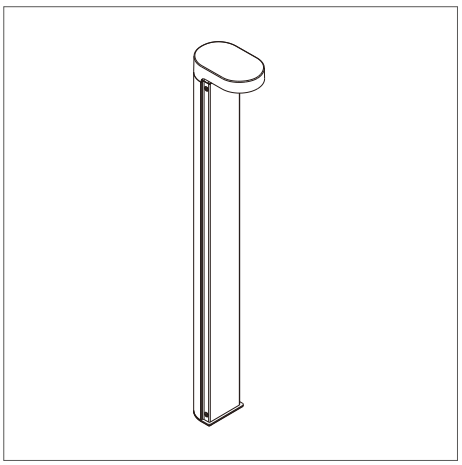

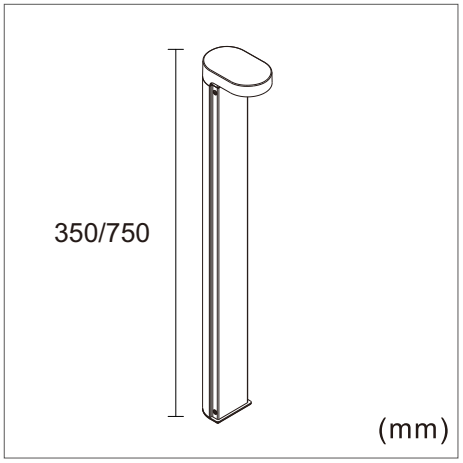

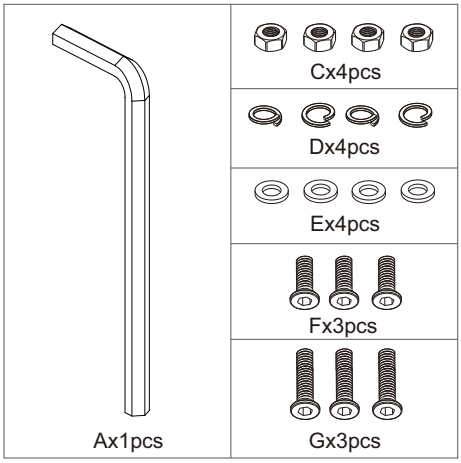

Accessories bag

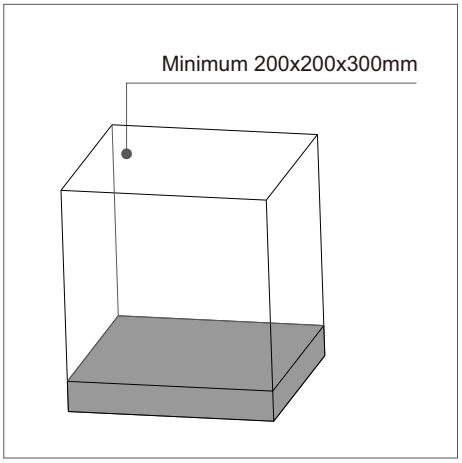

1. Dig a hole with minimum size 200x200x300mm

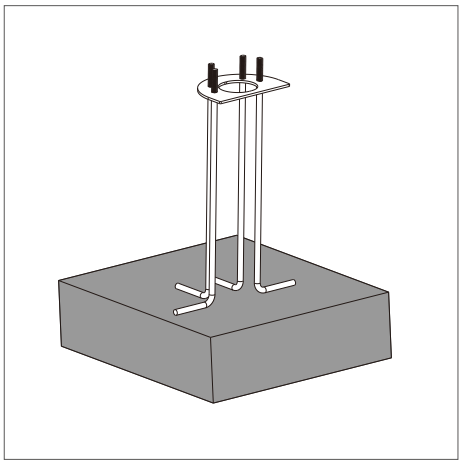
2. Put the J Anchor Bolt Kit into the hole

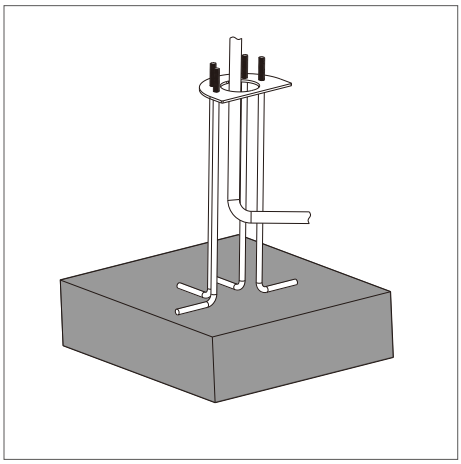
3. Install the conduit tube

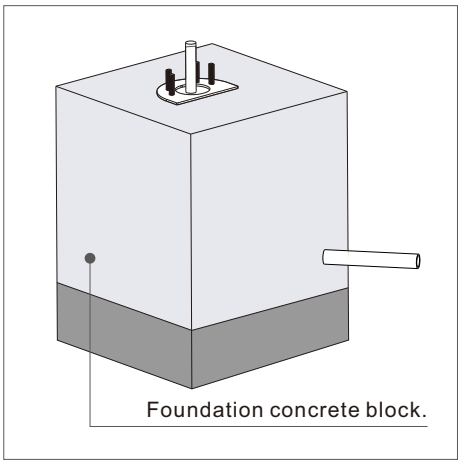

4.Make sure the bracket plate is flat with ground

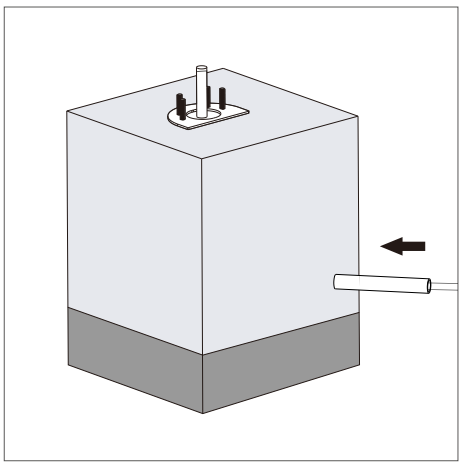
5. Put the wire through conduit tube

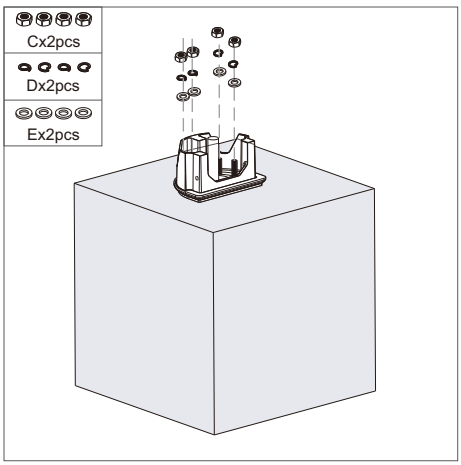

6. Fix the bollard tube onto the mounting base

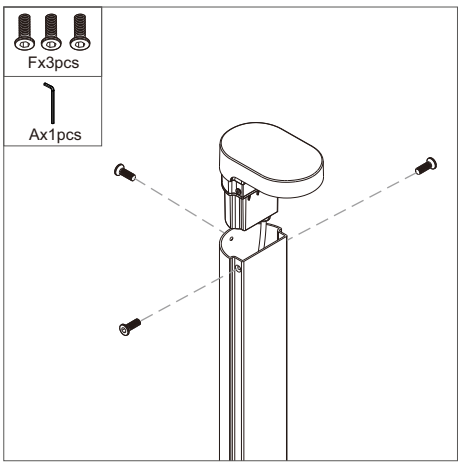

7. Fix the bollard head and bollard tube

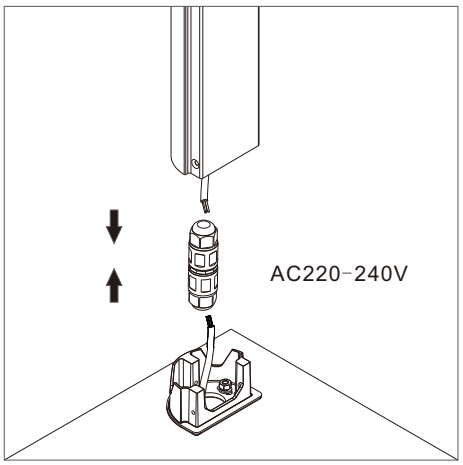

8. Connect the bollard wire to the electricity cable

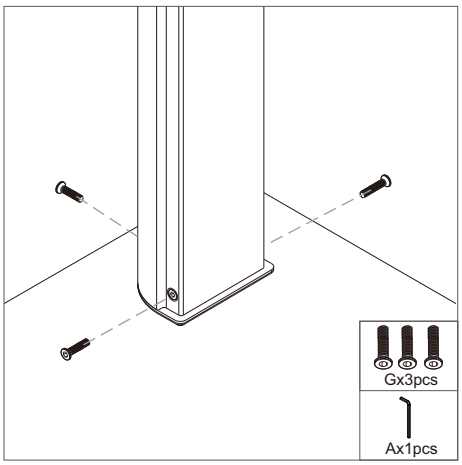

9. Fix the bollard tube onto the mounting base

